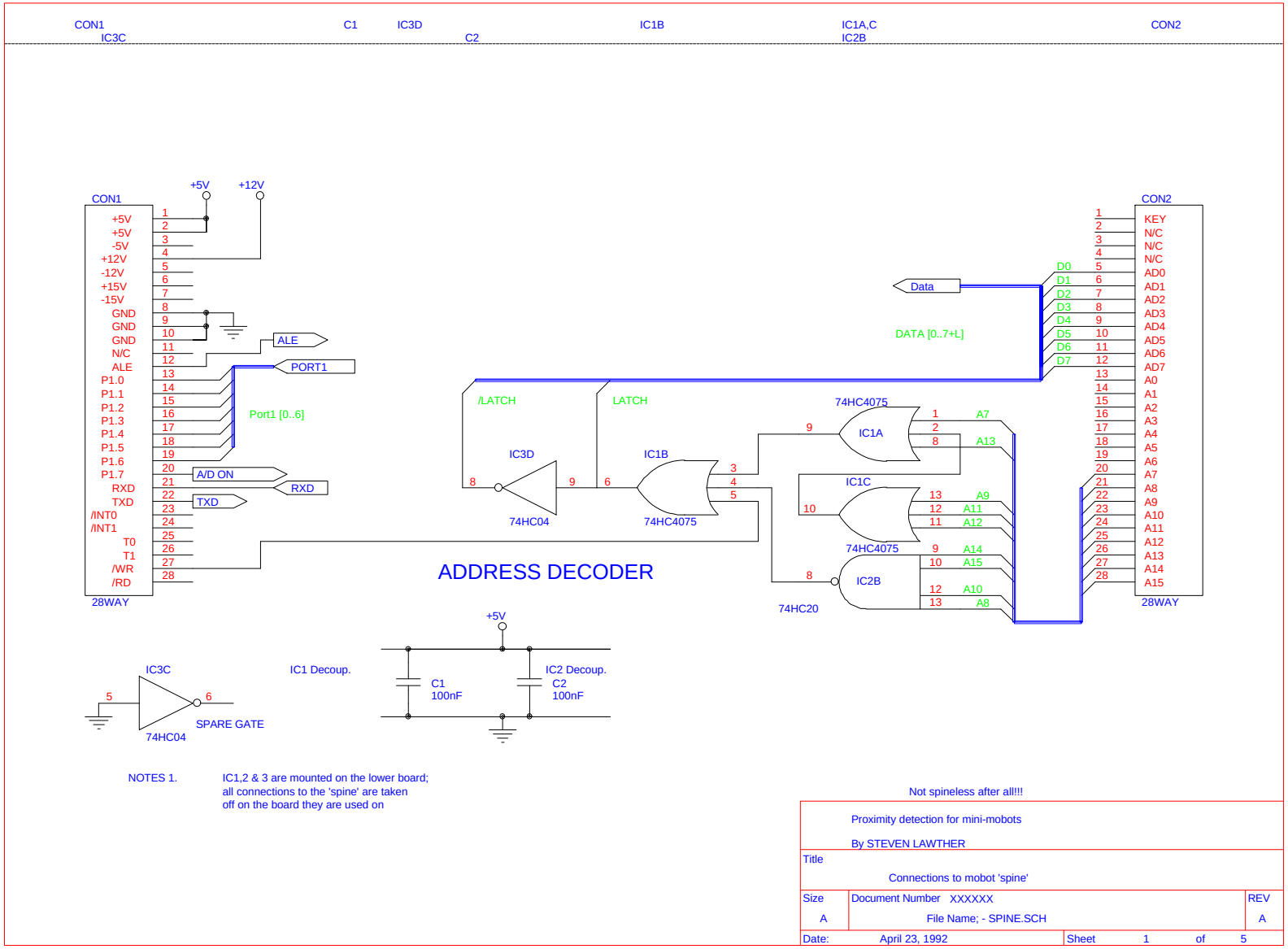

NOTES 1. IC1,2 & 3 are mounted on the lower board; all connections to the 'spine' are taken off on the board they are used on

Not spineless after all!!!

Proximity detection for mini-mobots

By STEVEN LAWTHER

Title	Connections to mobot 'spine'	
Size A	Document Number XXXXXX File Name; - SPINE.SCH	REV A
Date: April 23, 1992	Sheet 1 of 5	

Copyright 1992 Steve Lawther

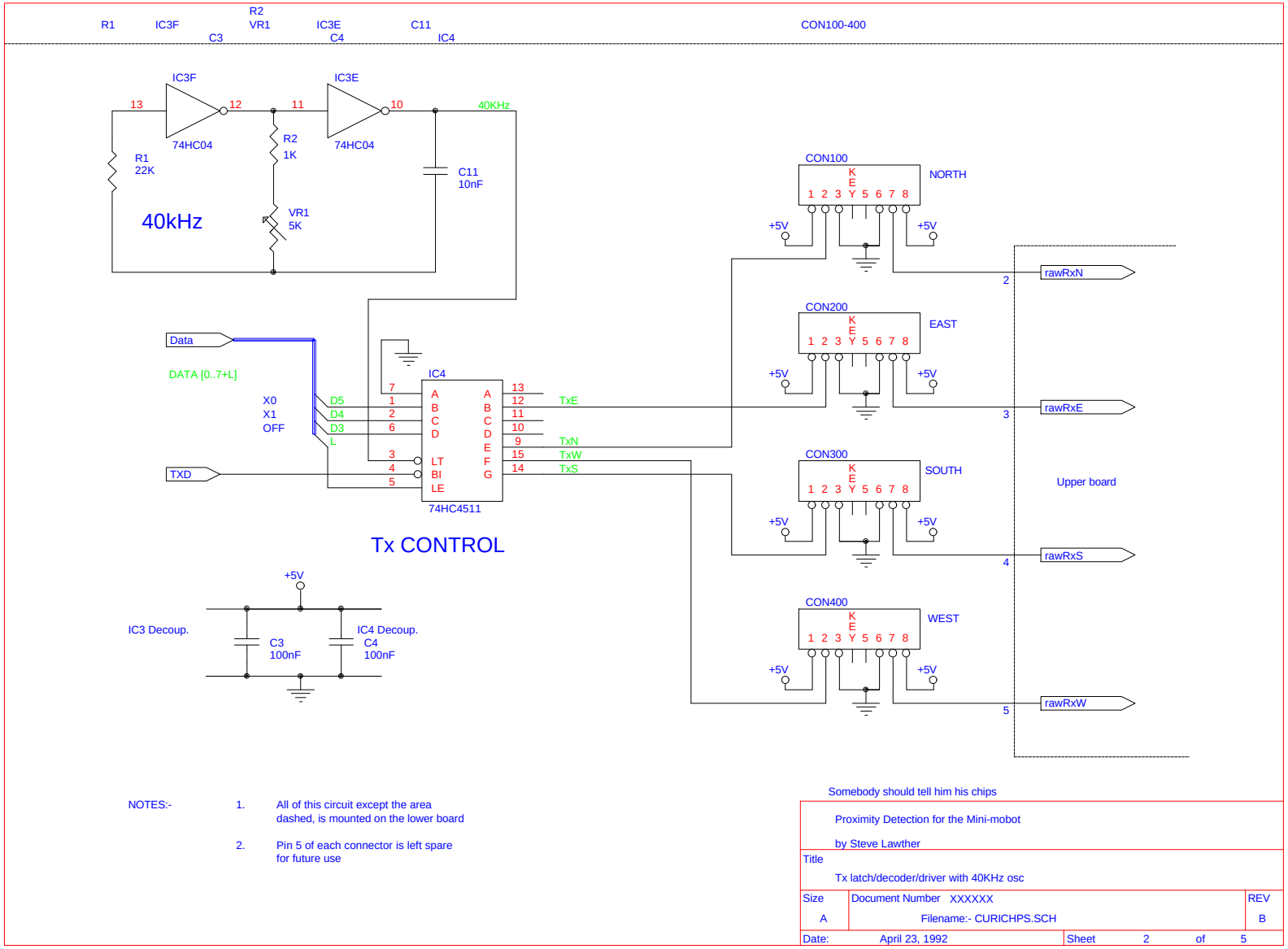

NOTES:-

1. All of this circuit except the area dashed, is mounted on the lower board

2. Pin 5 of each connector is left spare for future use

Somebody should tell him his chips

Proximity Detection for the Mini-mobot

by Steve Lawther

Title

Tx latch/decoder/driver with 40KHz osc

Size	Document Number XXXXXX	REV
A	Filename:- CURICHPS.SCH	B

Date: April 23, 1992 Sheet 2 of 5

Copyright 1992 Steve Lawther

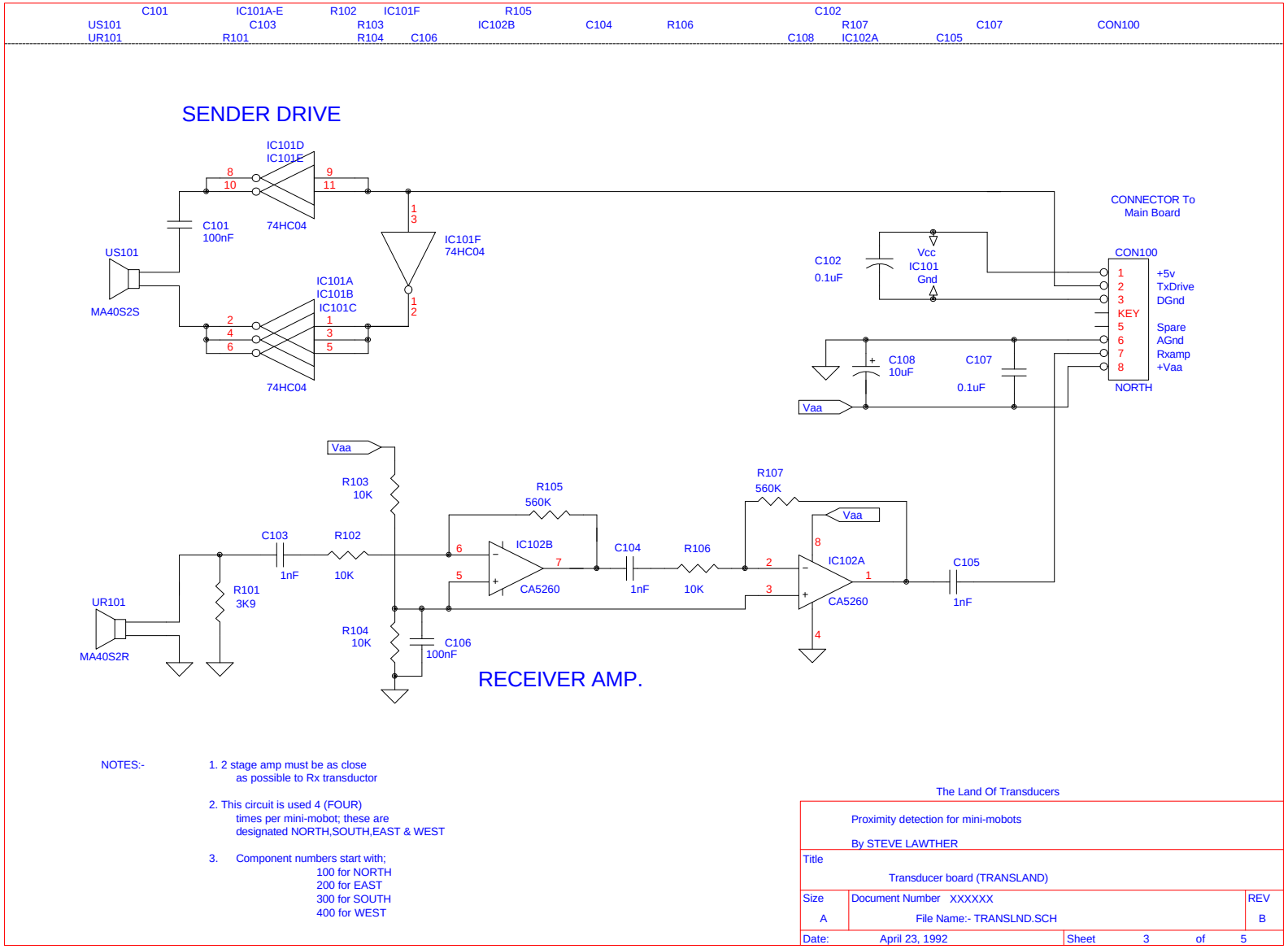

NOTES:-

1. 2 stage amp must be as close as possible to Rx transductor

2. This circuit is used 4 (FOUR) times per mini-mobot; these are designated NORTH,SOUTH,EAST & WEST

3. Component numbers start with;
   100 for NORTH
   200 for EAST
   300 for SOUTH
   400 for WEST

The Land Of Transducers

Proximity detection for mini-mobots

By STEVE LAWTHER

Title	Transducer board (TRANSLAND)	
Size A	Document Number XXXXXX File Name:- TRANSLND.SCH	REV B
Date: April 23, 1992	Sheet 3 of 5	

Copyright 1992 Steve Lawther

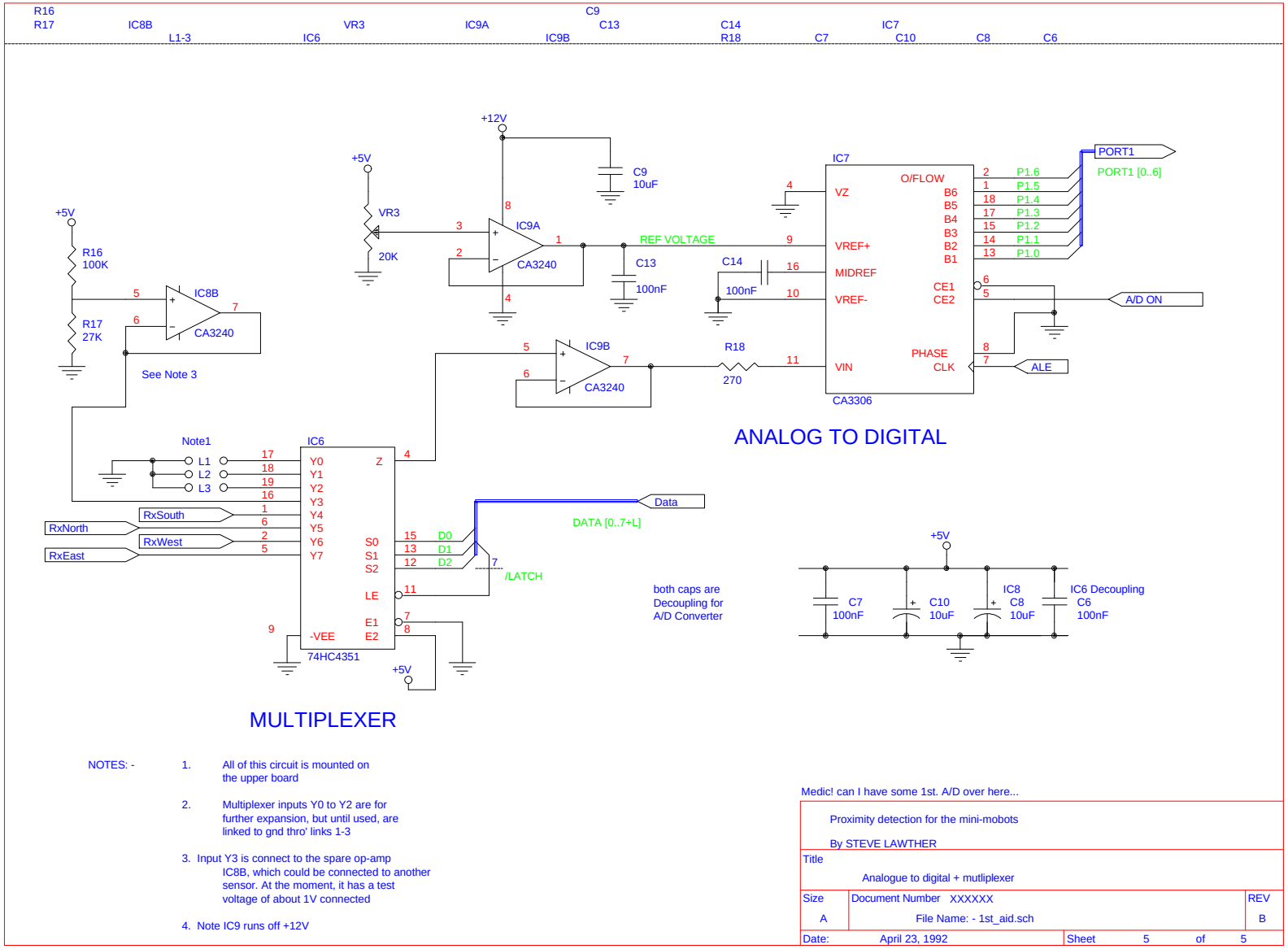

NOTES: -

1. All of this circuit is mounted on the upper board
2. Multiplexer inputs Y0 to Y2 are for further expansion, but until used, are linked to gnd thro' links 1-3
3. Input Y3 is connect to the spare op-amp IC8B, which could be connected to another sensor. At the moment, it has a test voltage of about 1V connected
4. Note IC9 runs off +12V

Medic! can I have some 1st. A/D over here...

Proximity detection for the mini-mobots

By STEVE LAWTHER

Title	Analogue to digital + mutliplexer	
Size A	Document Number XXXXXX File Name: - 1st_aid.sch	REV B
Date: April 23, 1992	Sheet 5 of 5	

Copyright 1992 Steve Lawther

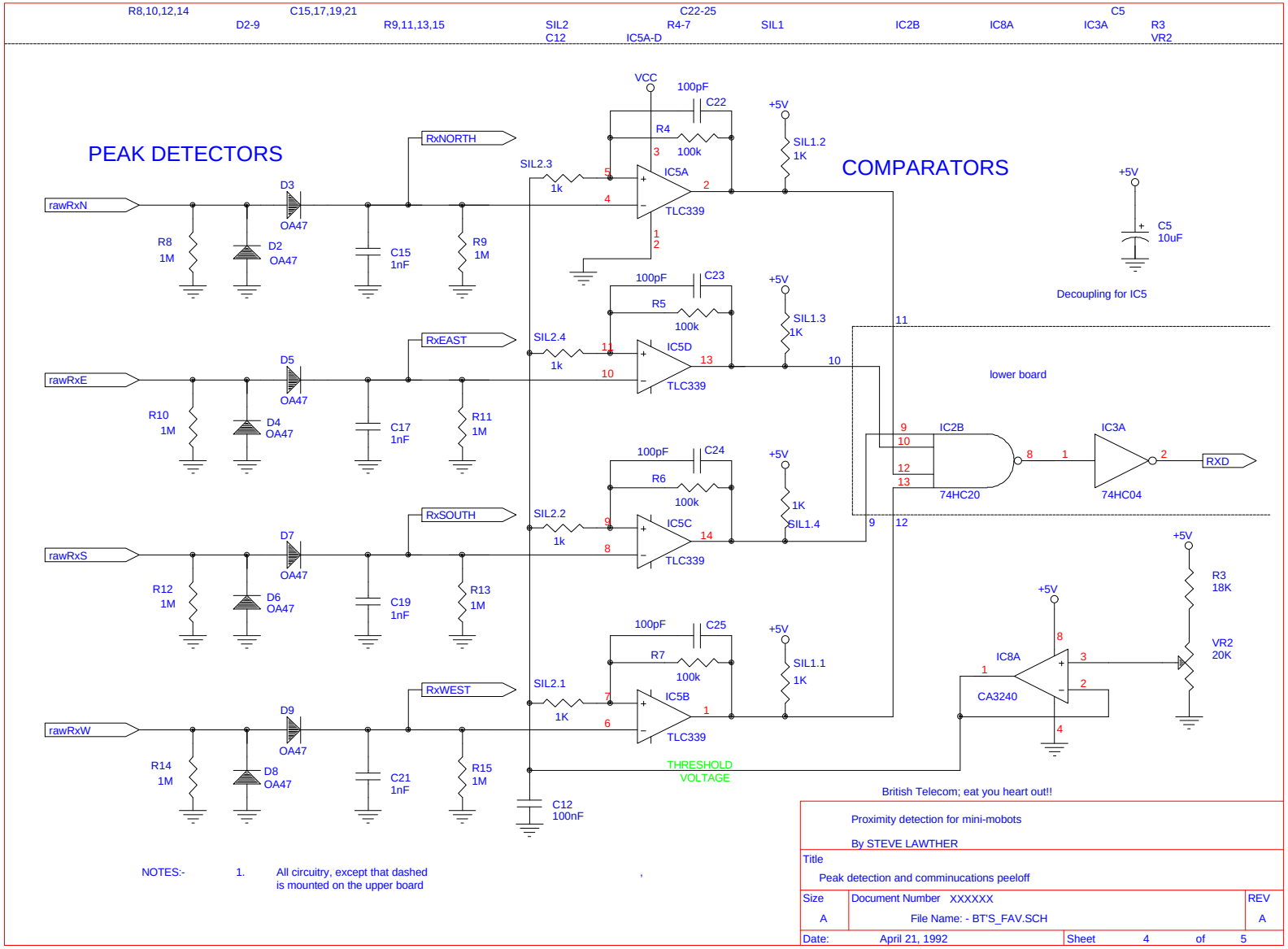

NOTES:- 1. All circuitry, except that dashed is mounted on the upper board

Copyright 1992 Steve Lawther